F:\RD\R14\DWG7\FITTINGS\UNION-FF.DWG

Ra JIS 0.2 1.6 6.3 25

GENERAL TOLERANCE
0.5~5 ± 0.1
6~30 ± 0.2
31~120 ± 0.3
121~320 ± 0.5
321~1000 ± 0.8

HAITIMA CORPORATION
P.O.BOX 34-36 TAIPEI TAIWAN R.O.C.
Tel:+886-2-26585800 Fax:+886-2-26582266
E-mail:haitima@seed.net.tw www.haitima.com.tw

UNION F/F

A VIEW

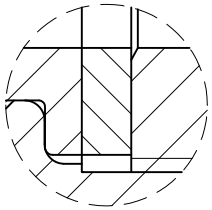

Flat union

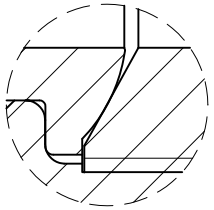

Conical union

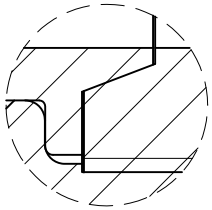

Conical union
with conical seat

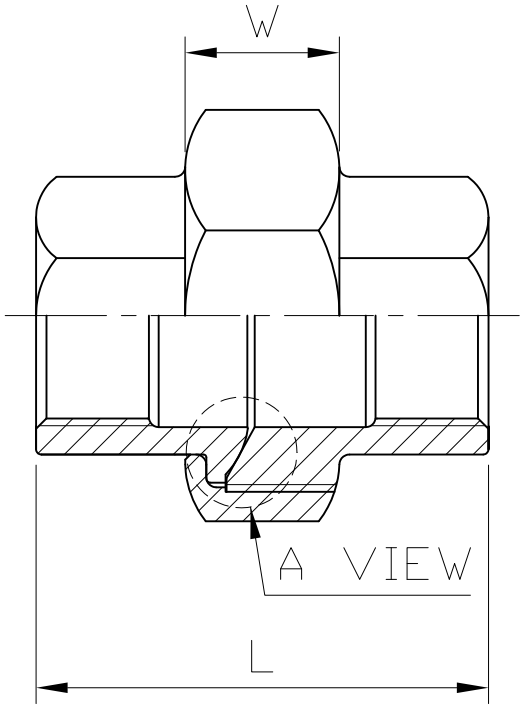

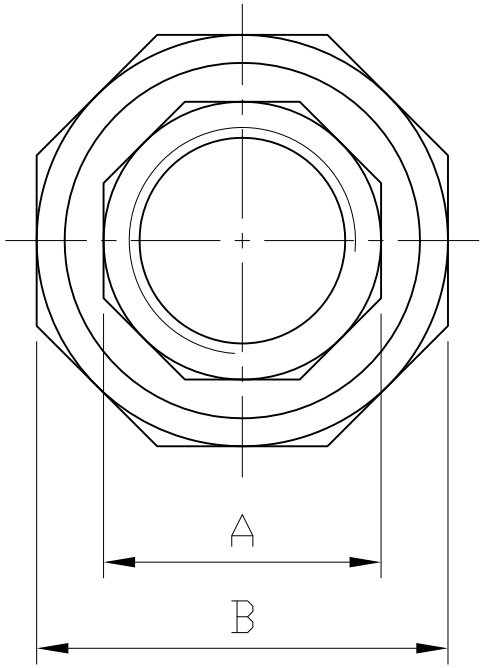

1/8"~1/4" Hexagon
3/8"~1" Octagon
1-1/4"~4" Decagon

SIZE	1/8"		1/4"		3/8"		1/2"		3/4"		1"		1-1/4"		1-1/2"		2"		2-1/2"		3"		4"	
	mm	in	mm	in	mm	in	mm	in	mm	in	mm	in	mm	in	mm	in	mm	in	mm	in	mm	in	mm	in
L	34.5	1.36	34.5	1.36	37.6	1.48	38.6	1.52	44	1.73	51	2.01	58	2.28	59	2.32	61.5	2.42	71	2.8	90	3.54	97	3.82
A	17.2	0.68	17.5	0.69	20.5	0.81	26.5	1.04	31.2	1.23	38	1.5	47.5	1.87	54	2.13	67	2.64	83	3.27	96	3.78	122.5	4.82
B	28	1.1	28	1.1	34	1.34	39.2	1.54	46	1.81	55	2.17	63.5	2.5	71	2.8	85	3.35	105.5	4.15	123.7	4.87	153.5	6.04
W	12.2	0.48	12.2	0.48	15	0.59	15	0.59	15	0.59	17	0.67	20	0.79	20	0.79	20.8	0.82	24	0.94	28	1.1	33	1.3

Tolerance: ±0.5mm(1/8"~2")
±0.8mm(2-1/2"~4")

Revise	Description	Date	Approve
3			
2			
1			

HAITIMA CORPORATION
Ball Valves & Pipe Fittings

CHECK BY	DRAWING BY	DATE	SPECIFICATION	Union F/F
	Dune	Jul.16.2008	MATERIAL	304/316
			PROCESS/Nr.	
			UNIT / SCALE	mm

DRAWING NO. F18 -09